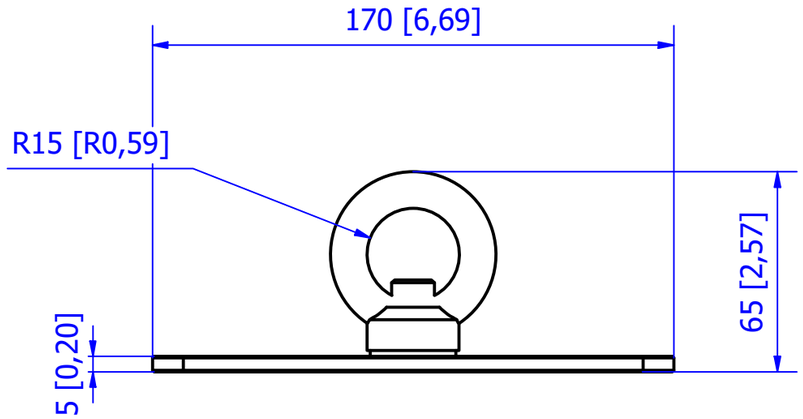
170 [6,69]
R15 [R0,59]
65 [2,57]
5 [0,20]

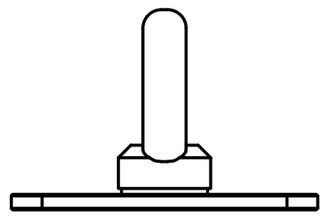

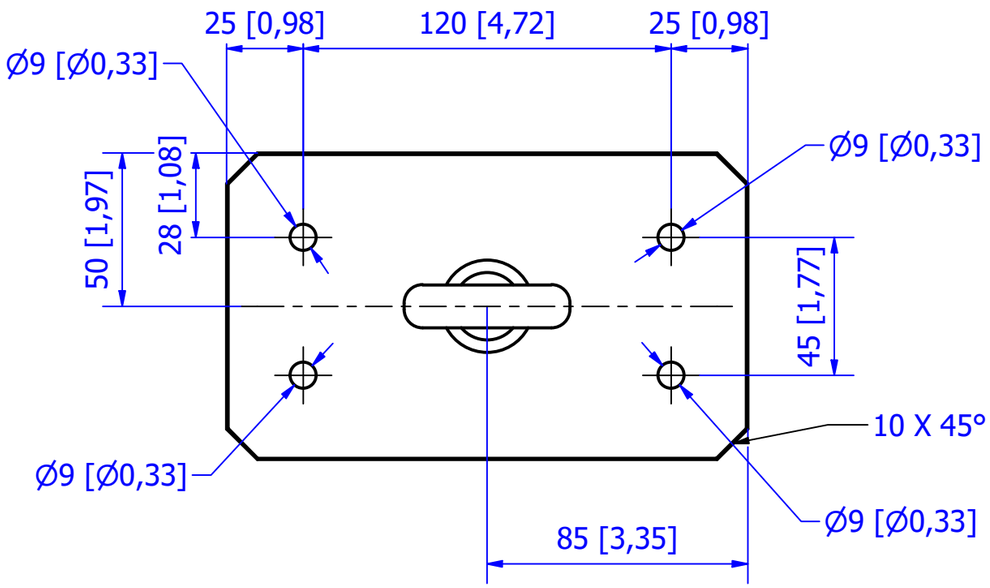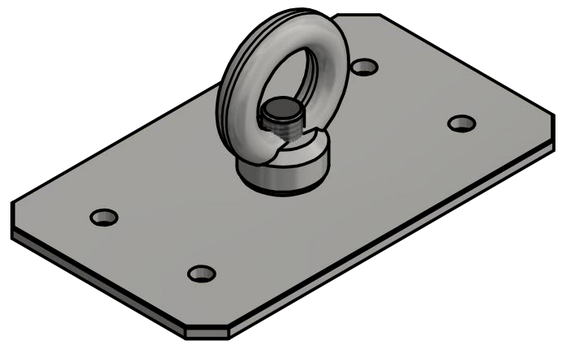
25 [0,98]
120 [4,72]
25 [0,98]
Ø9 [Ø0,33]
Ø9 [Ø0,33]
50 [1,97]
28 [1,08]
45 [1,77]
10 X 45°
Ø9 [Ø0,33]
Ø9 [Ø0,33]
85 [3,35]