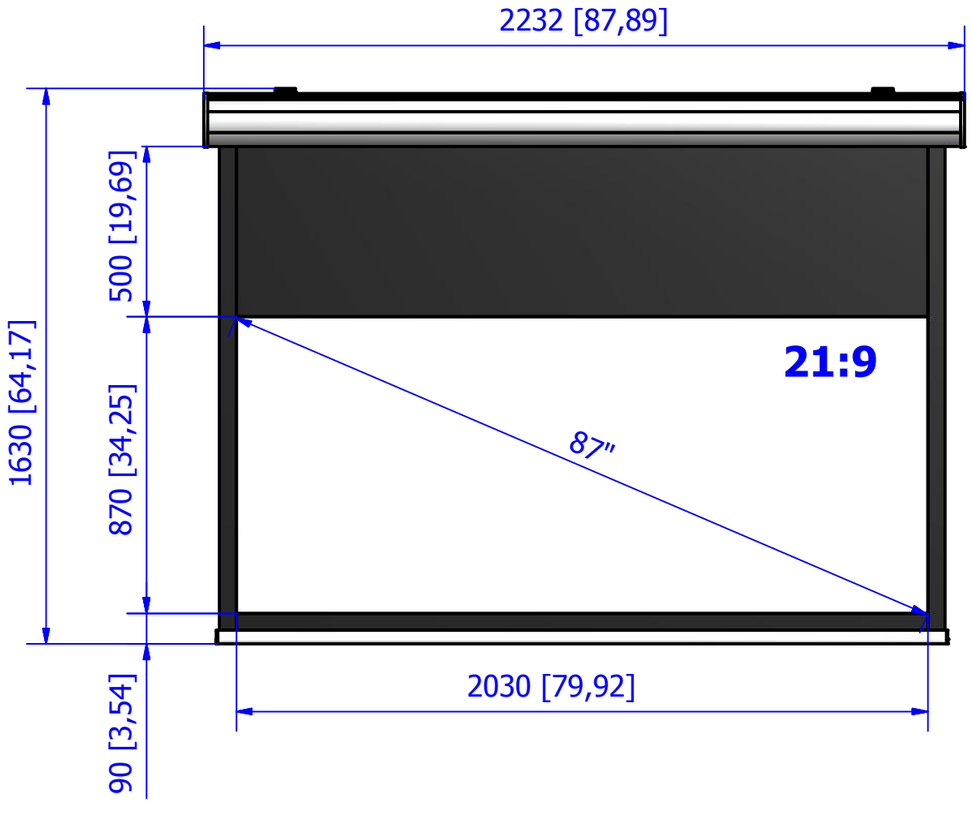
2232 [87,89]
1630 [64,17]
500 [19,69]
870 [34,25]
90 [3,54]
21:9
87"
2030 [79,92]

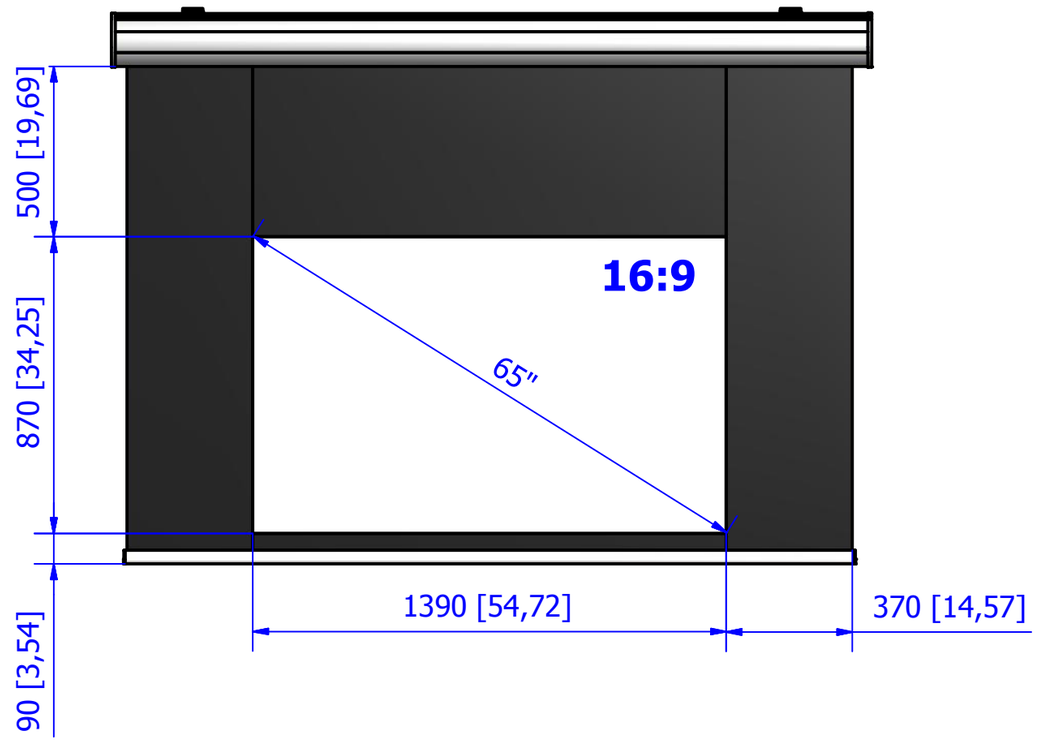
500 [19,69]
870 [34,25]
90 [3,54]
16:9
65"
1390 [54,72]
370 [14,57]

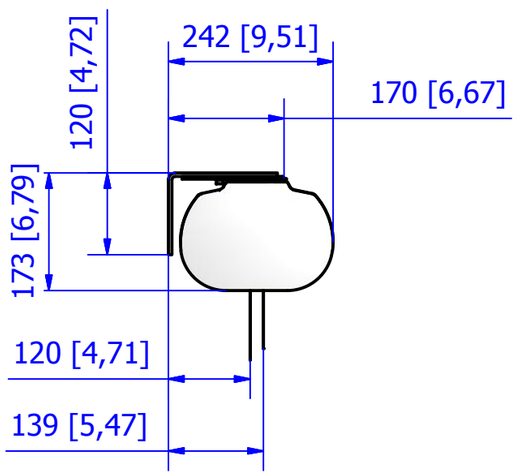
120 [4,72]
242 [9,51]
170 [6,67]
173 [6,79]
120 [4,71]
139 [5,47]